Exam Date & Time: 25-Nov-2024 (09:30 AM - 12:30 PM)

MANIPAL ACADEMY OF HIGHER EDUCATION

MIT BLR - BTech III Semester - End Semester Examination - Nov / Dec -2024

Circuits and Systems [ECM-2123]

Marks: 50 **Duration: 180 mins.**

PART-A

Answer all the questions.

1) Determine the current delivered by the source in the network of Fig. 1A.

A)

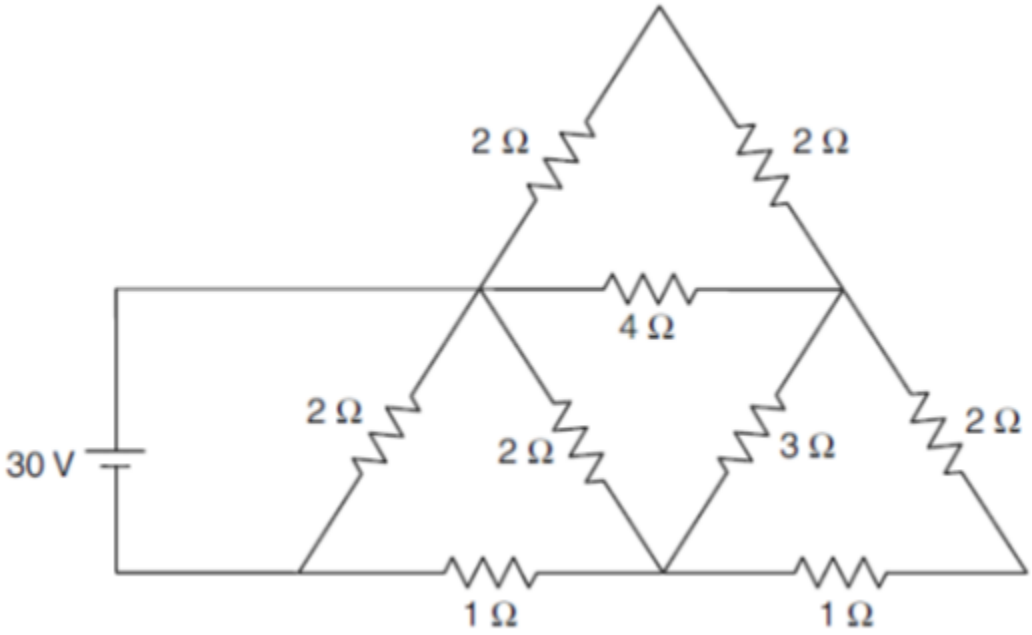

Fig: 1A

(2)

B) (4)

Calculate the value of resistance R_L in Fig. 1B for maximum power transfer and calculate maximum power.

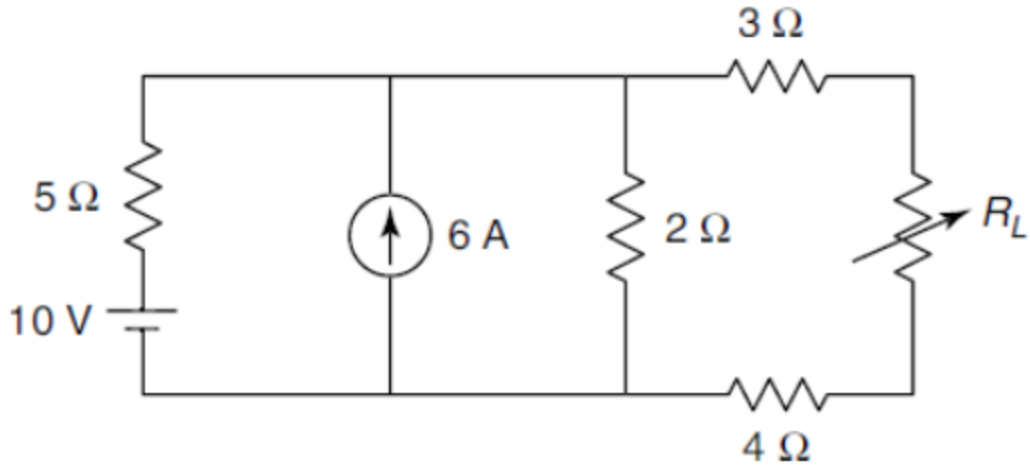

Fig: 1B

C) Calculate current I and verify the reciprocity theorem for the network shown in Fig. 1C.

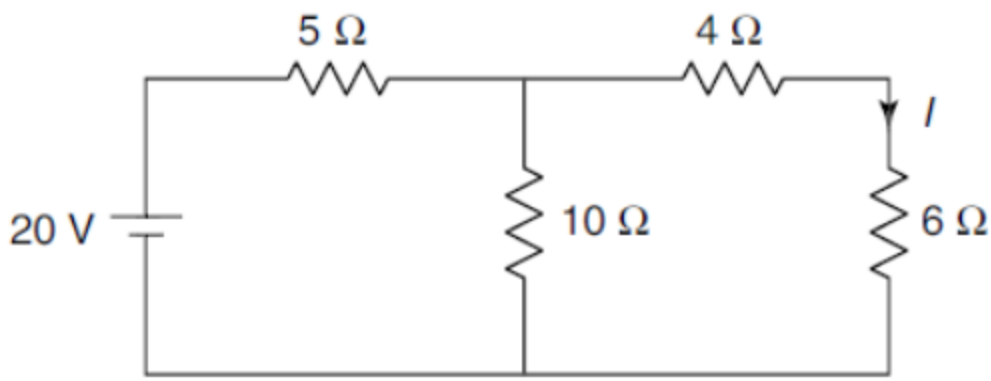

(4)

Fig: 1C

2) (5)

A)

In the network shown in Fig. 2A, the switch is closed at t = 0. With the capacitor uncharged, obtain the value for the following at $t = 0^+$

a. i
b. di/dt
c. d^2i/dt^2

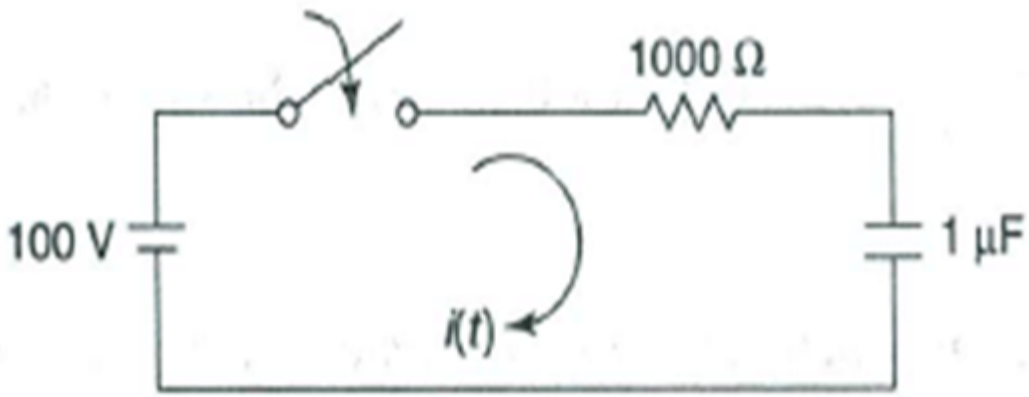

Fig: 2A

B) For the network shown in Fig. 2B, the switch is opened at t = 0. Calculate V(t) for t > 0.

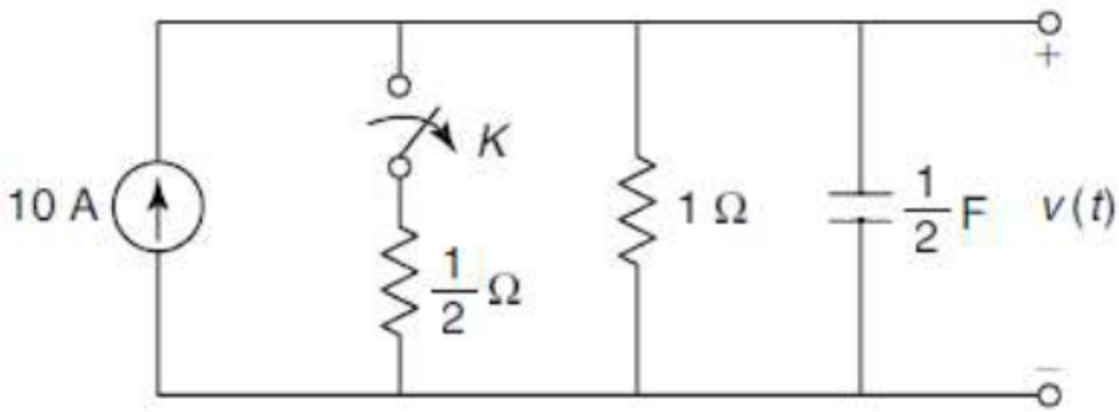

(5)

Fig: 2B

3) (4)

A)

A general network consisting of a resistor and an inductor is shown in Fig. 3A. The switch is closed at time t = 0. Using Laplace transform, obtain the expression for i(t) for t > 0.

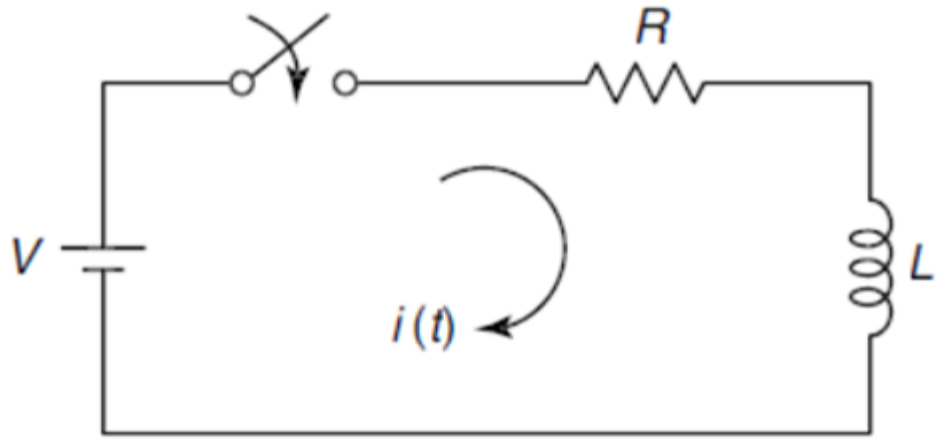

Fig: 3A

B) In the network shown in Fig. 3B, the switch is opened at t = 0. Steady-state condition is achieved before t = 0. Using Laplace transform, obtain i(t).

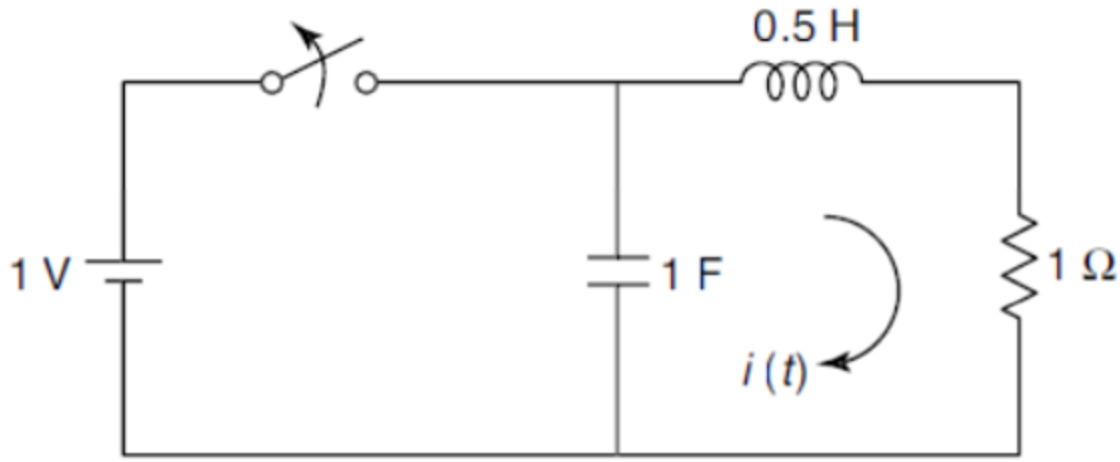

(4)

Fig: 3B

C) (2)

In the network of Fig. 3C, the switch is moved from a to b, at t = 0. For t > 0, determine v(t) using Laplace transform.

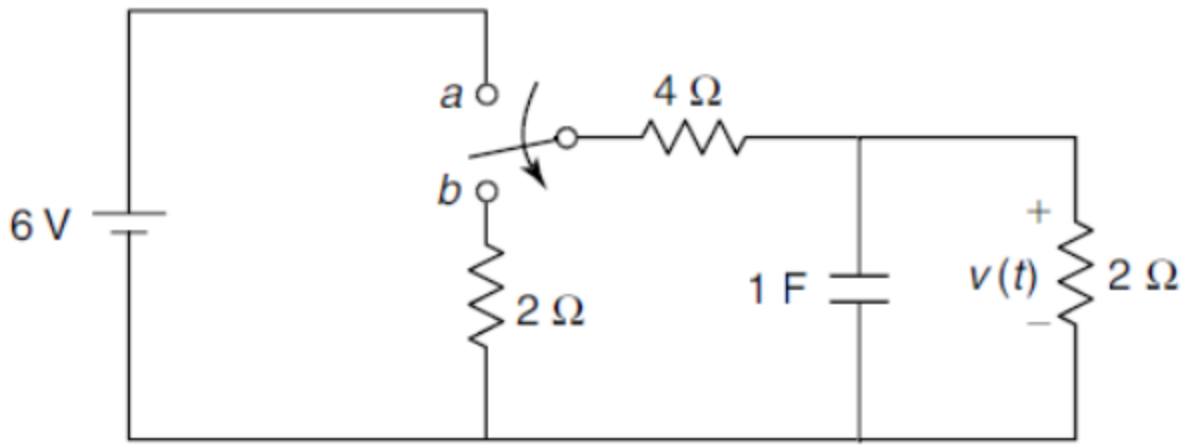

Fig: 3C

4) Using the signals $x[n]$ and $y[n]$ provided, sketch the following signals,

A)
a. $x[-n]y[-n]$
b. $x[n+2]y[n-2]$

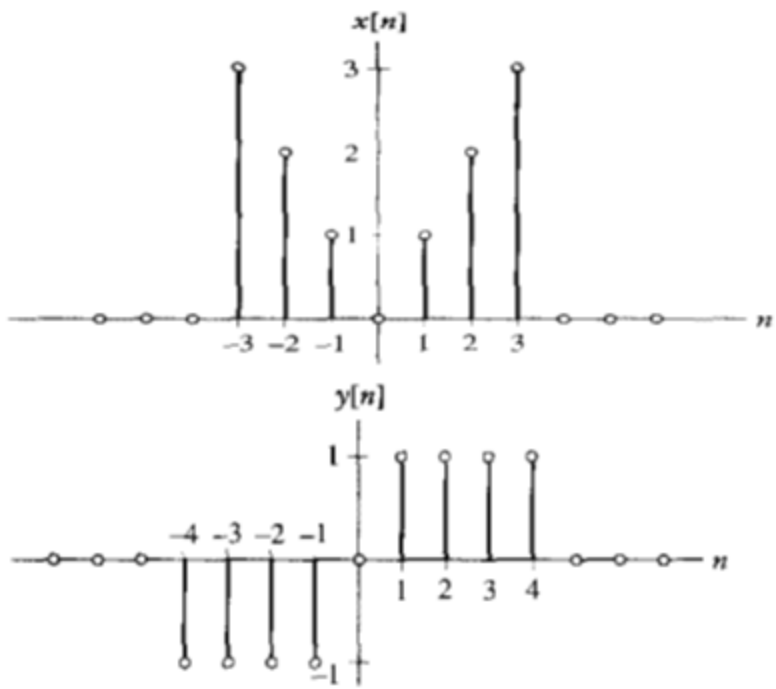

(4)

B) Determine whether the following systems are causal and time-invariant, (4)

a) $y(t) = at^2x(t) + bt\,x(t-2)$
b) $y[n] = a^n x(n)$

C) Determine if the following system is linear and memoryless

$$y[n] = 2x[n] + 4$$ (2)

5) Obtain the block diagram representations for systems described by the following difference equations:

A)

a) $y[n] = \frac{1}{3}y[n-1] + \frac{1}{2}x[n]$

b) $y[n] = \frac{1}{4}y[n-1] + x[n-1]$ (4)

B) List the Dirichlet's conditions that must be satisfied by the periodic signal for the Fourier series to exist. (3)

C) Obtain the Fourier transform of the signal $x(t) = e^{-t}sin(5t)\,u(t)$ (3)

-----End-----